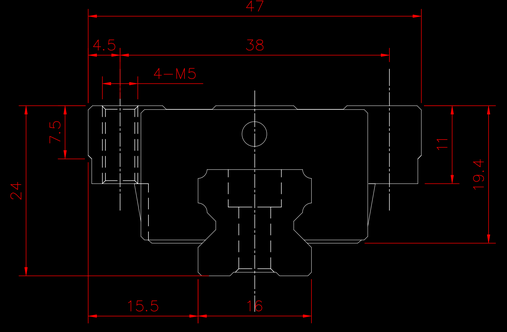
47
4.5
38
4-M5
7.5
24
11
19.4
15.5
16

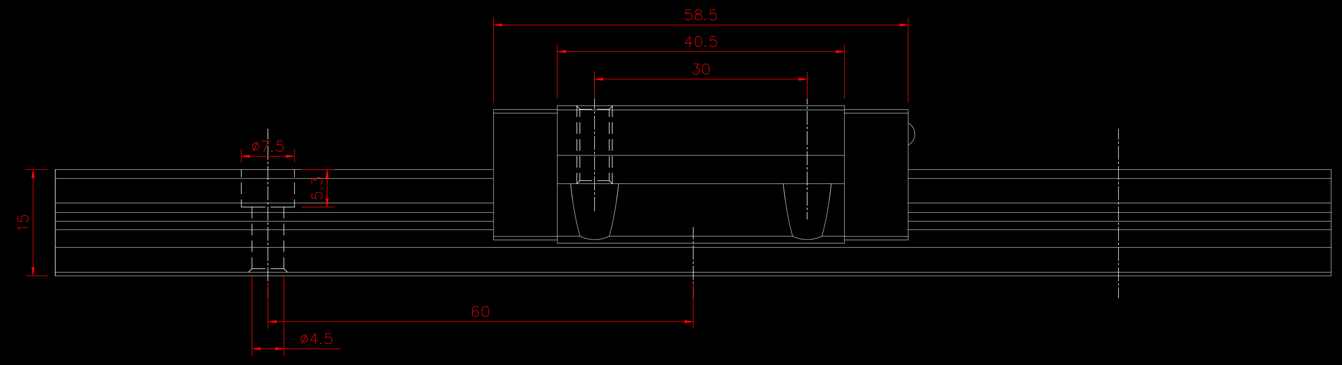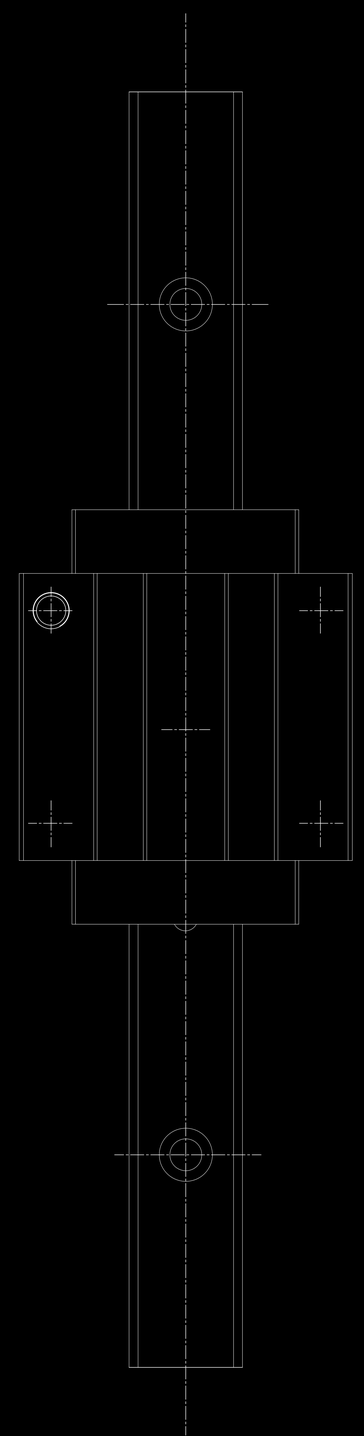
58.5
40.5
30
ø7.5
5.3
15
60
ø4.5